SKG123L系列规格书
L1+L5双频定位模块/
SKG123L Series Datasheet
L1+L5 positioning module

系列型号/Serial model No.: **SKG123L**

SKG123LD

文档信息/Document information	
标题/Title	SKG123L 系列高性能的双频导航定位模块规格书/ SKG123L Series of high-performance dual-frequency navigation and positioning module specifications
文档类型/Document type	规格书/Datasheet
文档编号/Document number	SL-21050175
修订和日期/Revision and date	V2.04 1-Aug-2023
公开限制/Disclosure restriction	外部公开/External public

版本历史

版本号/Version	版本描述/Version description	制定/ Mark	发布日期/Date
V1.01	初始版本/The initial version	Swift	20210510
V1.02	修改产品特点：RTCM(v2.3 和 v3.3)	Wendy	20210926
V1.03	修改系列型号（删除型号 SKG123LD）	Wendy	20211122
V1.04	修改第 18,19 号引脚名称	Wilson	20211222
V1.05	增加参考电路注意事项	George	20220811
V1.06	增加英文版/Add English version	Wendy	20220829
V2.01	型号由 SKG123 修改为 SKG123L/The model number was modified from SKG123 to SKG123L	Wendy	20230110
V2.02	更新定位精度/Update position accuracy	Bennett	20230308
V2.03	删除天线开短路检测功能/Remove the antenna open short-circuit detection function	Bennett	20230418
V2.04	增加型号 SKG123LD/Add the model SKG123LD	Bennett	20230801

目录

1 产品简介/ General Description 4
2 典型应用/ Applications 4
3 产品特点/Features 5
4 性能参数/ performance parameter 6
5 PIN 脚定义/ PIN definition 7
6 电气特性/Electrical character 9
6.1 极限值/ Limit value 9
6.2 运行条件/Operational condition 9
7 传输及外设接口/Transmission and peripheral interface 10
7.1 PPS 10
7.2 UART 10
7.3 GPIO（预留/Reserved） 10
7.4 WAKEUP_GPS（预留/Reserved） 11
7.5 WAKEUP_HOST（预留/Reserved） 11
8 默认配置/ Default setting 11
9 软件说明/ Software description 12
9.1 NMEA 0183 协议/ The NMEA 0183 protocol is available 12
9.2 GGA-定位数据信息/GGA- Location information 12
9.3 GSA-当前卫星信息/GSA- GNSS satellites in using 13
9.4 GSV-可见卫星信息//GSV-GNSS Satellites in View 14
9.5 RMC-推荐定位信息/ RMC-Recommended Minimum locating information 16
9.6 GLL-地理定位信息/Geographic Position – Latitude/Longitude 17
9.7 VTG-地面速度信息/VTG-Course Over Ground and Ground Speed 17
9.8 ZDA-时间日期信息/ ZDA-Date and Time 18
10 机械尺寸/Mechanical size 19
10.1 Layout 注意事项/ Layout Notes 19
11 包装规格/ Packing specifications 21
12 贴片建议/Paste suggestions 22
13 参考电路/ Reference circuit 22
14 订购信息/ Order information 23
15 联系方式/Contact information 23

1 产品简介/ General Description

SKG123L 是一款高性能的、多系统双频导航定位模块，模块能同时支持 GPS、北斗、GLONASS、Galileo、QZSS 的卫星接收模块，L1+L5 双频的定位使定位更快，精度更高，产品性能更可靠。

SKG123L is a high performance, multi-system dual-frequency navigation and positioning module, which can simultaneously support GPS, Beidou, GLONASS, Galileo, QZSS satellite receiving module. L1+L5 dual-frequency positioning enables faster positioning, higher accuracy, and more reliable product performance.

该模组以其卓越性能，可以为车载和便携式手持等定位终端产品的制造提供了高灵敏度、高精度、低成本的定位、导航等解决方案，能满足专业定位的严格要求与个人消费需要。

With its excellent performance, the module can provide positioning and navigation solutions with high sensitivity, high precision and low cost for the manufacturing of positioning terminal products such as vehicle and portable handheld products, which can meet the strict requirements of professional positioning and personal consumption needs.

外形尺寸紧凑，兼容市场上国际主流导航定位模块，采用 SMD 焊盘，支持标准取放及回流焊接。

Compact size, compatible with the international mainstream navigation and positioning module in the market, using SMD pad, support standard take and put and reflow welding.

图 1：SKG123L 正视图

2 典型应用/ Applications

- 汽车导航/ Car navigation
- 个人导航设备/ Personal navigation equipment
- 汽车保全系统/ Car security system
- 车辆监控/ Vehicle monitoring
- IRNSS 应用/ IRNSS application

3 产品特点/Features

◆ L1 支持 GPS, GLO, GAL, BDS, QZSS, SBAS 系统/ L1 supports GPS, GLO, GAL, BDS, QZSS, SBAS systems

◆ L5 支持 GPS, GAL, BDS, QZSS/ L5 supports GPS, GAL, BDS, and QZSS

◆ 支持 SBAS(WAAS, EGNOS, MSAS, GAGAN)/ Support SBAS(WAAS, EGNOS, MSAS, GAGAN)

◆ 支持 RTCM(v2.3 和 v3.3)/ Support RTCM(v2.3 和 v3.3)

◆ 支持 AGPS: EPO, EASY, NVRAM, hotstill/ Support AGPS: EPO, EASY, NVRAM, hotstill

◆ 支持 Power Saving Mode: Sleep mode, RTC mode, Periodic Mode, GLP, ULP/ Support Power Saving Mode: Sleep mode, RTC mode, Periodic Mode, GLP, ULP

◆ 支持 PPS 授时，精度可达±15ns，PPS 与 NMEA 相关联/ PPS timing is supported with accuracy up to ± 15ns, and PPS is associated with NMEA

◆ 最多可追踪 75 颗 L1 卫星以及 60 颗 L5 卫星/ Up to 75 L1 satellites and 60 L5 satellites can be tracked

◆ 极快的 TTFF：冷启动小于 28s (CTTFF is 24s with GLO)；热启动小于 1s/ 极快的 TTFF：冷启动小于 28s(CTTFF 是 24s 与 GLO)；热启动小于 1s

◆ 工业级标准/ Industrial grade standard

◆ 弱信号下具有较好的定位精度和位置有效性/ It has better positioning accuracy and location effectiveness under weak signals

◆ 具有优越的质量和可靠性/ With a superior quality and reliability

◆ 符合 ROHS, FCC, CE 标准/ ROHS, FCC, CE standards

4 性能参数/ performance parameter

表 4-1 基本参数/ Table 4-1, Basic Parameters

参数/ Parameter	描述/ Describe	性能指标/ Performance index	
电压/Voltage		3.0~4.3V	
射频输入/RF Input	L1	1602 MHz	GLONASS L1OF
		1575.42 MHz	GPS L1CA QZSS L1CA SBAS L1 QZSS L1 SAIF Galileo E1 (E1B+E1C)
		1561.098 MHz	BeiDou B1l
	L5	1176.45 MHz	GPS L5 QZSS L5 Galileo E5a BeiDou B2a
	驻波比/ standing-wave ratio (SWR)	≤1.5	
	输入阻抗/ Input impedence	50Ω±10%	
	天线增益/Antenna gain	0～32dB	
物理尺寸/ Physical size		16.4*12.2*2.4（单位：mm）	
数据接口/ Data interface		2 个 UART, TTL 电平,波特率 110～921600bps 可调(建议配置为 115200，当波特率过低时会导致数据输出缺损，如需 debug log 输出则必须设置 921600)，默认 115200/ 2 UART, TTL level, baud rate 110 to 921600 bps adjustable (recommended configuration is 115200, will cause data output defect when too low, if debug log output must be set 921600), default 115200	
天线检测/ Antenna detection		可支持天线馈电，需外置天线检测电路/ It can support the antenna feeding system, with a External antenna detection circuit is required	

表 4-2 GNSS 性能指标/ Table 4-2 Performance indicators of G N S S

参数/ Parameter	描述/Describe	性能指标/ Performance index
首次定位时间 TTFF	冷启动/Cold start	≤28s
	热启动/Hot start	≤1s
	重捕获/Recapture	≤1s
灵敏度/Sensitivity	捕获/Capture	-146dBm
	重捕获/Recapture	-160dBm
	跟踪/Tracks	-164dBm
动态性能/Dynamic property	速度/Velocity	Max 515m/s
	加速度/Accelerated velocity	Max 4g
定位精度/ positioning accuracy	Open Sky SBAS	1.5m CEP 1m CEP
速度精度/Speed accuracy		0.1m/s
PPS		±15ns
数据更新率/Data update rate		1Hz~10Hz，默认/Default:1Hz
导航数据格式 /Navigate data format		NMEA 0183 V4.1 版（不兼容 4.00 版本）/Version NMEA 0183 V4.1 (incompatible with version 4.00)

5 PIN 脚定义/ PIN definition

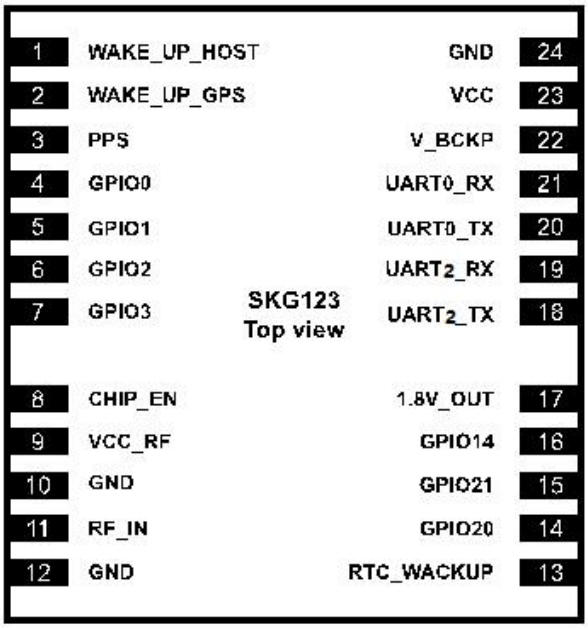

图 5-1 SKG123L 引脚定义/ Figure 5-1 The SKG123L pin definition

表 5-1 引脚定义/ Table 5-1 Pin definition

PIN No.	SKG123L	Chip PIN	电压 /voltage （±5%）	描述/Description
1	WAKEUP_HOST	GPIO24	1.8V	休眠唤醒控制输出管脚，默认低电平，不用可以悬空/ Dormant wake-up control output pin, the default low level, do not need to be suspended
2	WAKEUP_GPS	GPIO26	1.8V	休眠唤醒控制输入管脚，默认高电平，不用可以悬空/ Dormant wake-up control input pin, the default high level, do not need to be suspended
3	PPS	GPIO10	2.8V	PPS_OUT,默认 1Hz 输出，脉宽 100ms/ PPS_OUT, default 1Hz output, 100ms
4	GPIO0	GPIO0	2.8V	GPIO0
5	GPIO1	GPIO1	2.8V	GPIO1
6	GPIO2	GPIO2	2.8V	GPIO2(UART0_RTS)
7	GPIO3	GPIO3	2.8V	GPIO3(UART0_CTS)
8	CHIP_EN	CHIP_EN_IN	1.8V	预留,可作为模块的 reset/ Reserved, available as a reset of the module
9	VCC_RF	ANT_POWER_OUT	VCC	给外部有源天线供电/ Power-supply to the external active antenna
10	GND	GND		GND
11	RF_IN	RF_IN		GNSS RF 信号输入/ GNSS RF Signal input
12	GND	GND		GND
13	RTC_WACKUP	RTC_EINT	1.8V	退出 HW RTC mode（拉高大于 1ms）/Exit HW RTC mode (pull higher than 1ms)
14	GPIO20	GPIO20	1.8V	GPIO20（antenna detection）
15	GPIO21	GPIO21	1.8V	GPIO21（antenna detection）
16	GPIO14	GPIO14	1.8V	GPIO14（antenna detection）
17	1.8V_OUT	VIO18	1.8V	电源输出/Power output: 1.8V
18	UART2_TX	GPIO17:TXD2	1.8V	UART2_TX：RTCM
19	UART2_RX	GPIO16:RXD2	1.8V	UART2_RX：RTCM
20	UART0_TX	GPIO7:TXD0	2.8V	UART0_TX:NMEA 输出/ NMEA output；firmware download
21	UART0_RX	GPIO8:RXD0	2.8V	UART0_RX:NMEA 输入/ NMEA input；

				firmware download
22	V_BCKP	V_BCKP		备份电源输入/Backup power input：2.0-4.3V
23	VCC	VCC	3.0-4.3V	系统电源:3.0-4.3V,需要大于 500mA/ System power supply: 3.0-4.3V, required for more than 500mA
24	GND	GND		GND

6 电气特性/Electrical character

6.1 极限值/ Limit value

表 6-1 电源特性/ Table 6-1, Power Supply Characteristics

参数/ Parameter	符号/ Symbol	最小值/Min	最大值/Max	单位/ Unit	条件 /Condition
供电电压/Power supply voltage	VCC	-0.5	5.5	V	--
VCC 最大纹波/VCC maximum ripple	Vrpp	0	50	mV	--
输入管脚电压/Input pin voltage	Vin	-0.5	2.94	V	--
存储温度/Storage temperature	Tstg	-40	125	℃	--
ESD(HBM)	VESD(HBM)	--	2000	V	All pins

6.2 运行条件/Operational condition

表 6-2 运行条件/Table 6-2 Operating conditions

参数/ Parameter	符号/ Symbol	最小值/Min	典型值/Type	最大值/Max	单位/ Unit
供电电压/ Power supply voltage	VCC	3.0	3.3	4.3	V
VCC 电流（SKG123L）	Ivcc		52	57	mA
VCC 电流（SKG123LD）	Ivcc		26		mA
RTC 供电电压(VRTC)/ RTC Supply Voltage (VRTC)	Vrtc	2.0	3.0	4.3	V
RTC 电流/ RTC current	Irtc			0.09	mA
1.8V_OUT 电压/ 1.8V_OUT voltage	Vio18	1.62	1.8	1.98	V
1.8V_OUT 电流/ 1.8V_OUT current	I18			10	mA
GPIO 低电平(2.8V)/ GPIO low level (2.8V)	V2.8_low	0		0.2*2.8	V

GPIO 高电平(2.8V)/ GPIO High level (2.8V)	V2.8_high	0.67*2.8		3.08	V
GPIO 低电平(1.8V)/ GPIO Low level (1.8V)	V1.8_low	0		0.2*1.8	V
GPIO 高电平(1.8V)/ GPIO High level (1.8V)	V1.8_high	0.67*1.8		1.98	V
工作温度/ Operational temperature		-40		85	℃
存储温度/Storage temperature		-40		125	℃

7 传输及外设接口/Transmission and peripheral interface

7.1 PPS

秒脉冲（PPS）：SKG123L 提供非常精准的时间脉冲 PPS 信号，PPS 信号可为外部系统提供授时功能，脉冲宽度可调，精度 15ns，默认情况下每秒输出一个脉冲。

Second pulse (PPS): The SKG123L provides a very accurate time pulse PPS signal, the PPS signal can provide the timing function for the external system, the pulse width is adjustable, the accuracy is 15ns , by default, it output a pulse per second.

7.2 UART

支持数据传输、固件升级功能，输入/输出信号类型为 LVTTL 电平。默认波特率为 115200bps，最高可设为 921600bps，串口波特率均可由用户自行配置。

Support data transmission, firmware upgrade function, input / output signal type is LVTTL level. The default port rate is 115200bps, which can be set up to 921600bps, and the serial port port rate can be configured by the user.

UART2 可用作 RTCM 的输入和输出接口，默认波特率为 115200，输出速率 1HZ，波特率和输出速率可调。

The UART2 can be used as an input and output interface for the RTCM, with a default baud rate is 115200, an output rate is 1HZ, and the baud rate and output rate are adjustable.

7.3 GPIO（预留/Reserved）

预留 7 个通用 GPIO 接口，可由用户灵活配置。

Seven general GPIO interfaces can be flexibly configured by users.

7.4 WAKEUP_GPS（预留/Reserved）

提供 1 个外部中断信号输入管脚，上电初始为高电平。如果不使用，该信号可以悬空。

Provide 1 external interrupt signal input pin with initially high level. If not used, the signal can be suspended.

7.5 WAKEUP_HOST（预留/Reserved）

提供 1 个外部中断信号输出管脚，上电初始为低电平。如果不使用，该信号可以悬空。

Provide 1 external interrupt signal output pin, initially at a low level. If not used, the signal can be suspended.

8 默认配置/ Default setting

SKG123L 模块默认支持：

The SKG123L module is supported by default:

GPS/QZSS :L1 C/A, L5

BeiDou: B1I, B2a

Galileo: E1（E1B,E1C）,E5a

GLONASS: L1OF

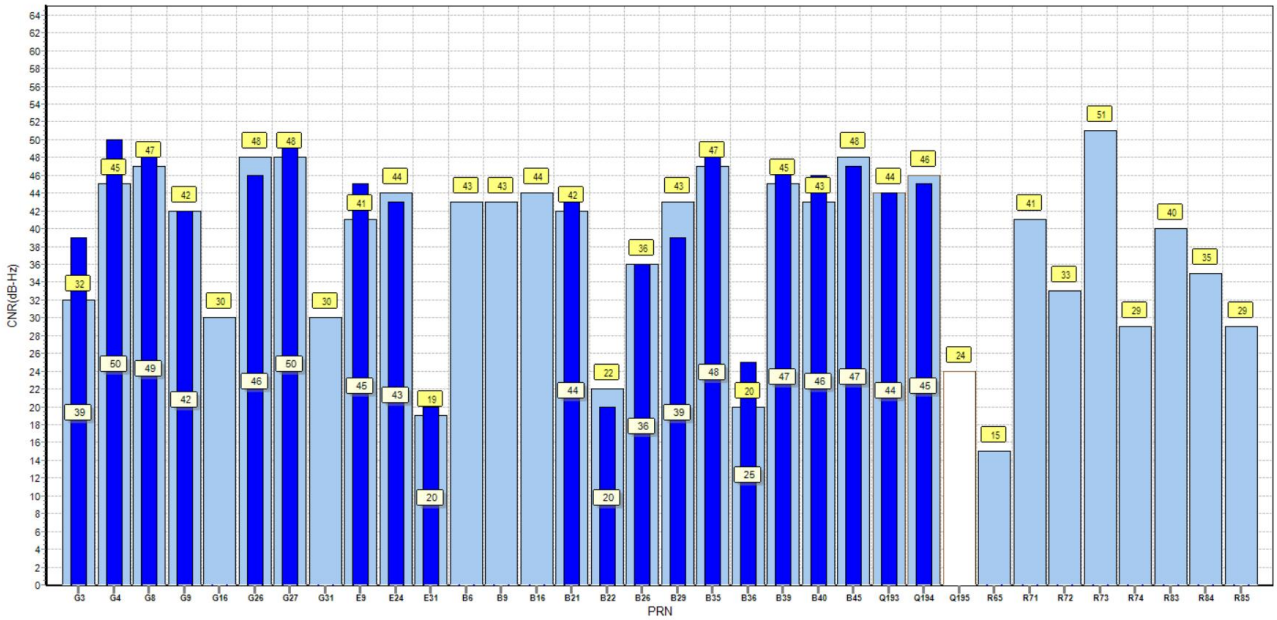

G-GPS, E-Galileo, B-BDS, R-Glonass, Q-QZSS

9 软件说明/ Software description

9.1 NMEA 0183 协议/ The NMEA 0183 protocol is available

表 9.1-1 NMEA-0183 输出信息/ Table 10.1-1 NMEA-0183 Output information

NMEA 协议/NMEA protocol	描述/Description	默认/Default
GGA	定位数据信息/ Global positioning system fixed data	打开/Y
GSA	当前卫星信息/ DOP and active satellites	打开/Y
GSV	可见卫星信息/ Satellites in view	打开/Y
RMC	推荐定位信息/Recommended minimum specific data	打开/Y
GLL	大地坐标信息/Geographic position—latitude/longitude	打开/Y
VTG	地面速度信息/ Course over ground and ground speed	打开/Y
ZDA	当前时间(UTC1)信息/Date and Time	打开/Y

表 9.1-2 标识符助记码/Identifier mnemonic code

标识符/Identifier	数据类型/ Data type
GB	北斗模式/ Beidou mode
GP	GPS 模式/ GPS mode
GN	GNSS 模式/ GNSS mode
GA	Galileo 模式/ Galileo mode
GL	GLONASS 模式/ GLONASS mode

9.2 GGA-定位数据信息/GGA- Location information

此语句包含定位位置、定位时间、定位精度。

Contains the location, time, and precision factor of navigation positioning.

$GNGGA,022326.000,2238.3443,N,11403.0962,E,1,22,0.72,104.0,M,-2.2,M,,*69

表 9.2-1 GGA 语句格式/GGA Data Format

名称/Name	举例 /Example	单位/Units	描述/Description
语句 ID/Message ID	$GNGGA		表明语句为 GGA 信息/ GGA protocol header
UTC 时间/UTC Position	022326.000		hhmmss.sss 时分秒格式/Time seconds format
纬度/ Latitude	2238.3443		ddmm.mmmm 度分格式/Degree split format

纬度 N/S / N/S indicator	N		N=北纬 S=南纬/ N=north or S=south
经度/ Longitude	11403.0962		dddmm.mmmm 度分格式
经度 E/W / E/W Indicator	E		E=东经 W=西经/ E=East or W=West
定位状态/ Position Fix Indicator	1		见附表 10.2-2/ See Table 10.2-2
已使用卫星数量 /Satellites Used	22		范围 0 到 24/ Range 0 to 12
HDOP 水平精度因子	0.72		
海拔高度/MSL Altitude	104.0	米/M	
单位/Unit	M		
大地水准面高度/ geoidal height	-2.2		
水准面划分单位/Level surface division unit	M	米/M	
校验值/ Checksum	*69		
EOL	<CR> <LF>		结束标志符/ End of message termination

表 9.2-2 定位状态描述/ Position Fix Indicators

数值/Value	描述//Description
0	未定位或定位信息不可用/ Unpositioned or positioned information is not available
1	SPS 模式/ SPS model
2	GNSS, SPS 模式/ GNSS, SPS mode
3	PPS 模式/ PPS model

9.3 GSA-当前卫星信息/GSA- GNSS satellites in using

此条语句包含模块的选定工作模式 ，定位类型，已使用卫星的 PRN 信息及 PDOP, HDOP, VDOP 等信息。

This statement contains the selected working mode of the module, positioning type, PRN information of used satellites, PDOP, HDOP, VDOP and other information.

$GNGSA,A,3,199,195,08,26,09,31,16,194,193,27,03,04,1.07,0.72,0.79,1*05

$GNGSA,A,3,67,66,,,,,,,,,,1.07,0.72,0.79,2*0E

$GNGSA,A,3,,,,,,,,,,,,1.07,0.72,0.79,3*0E

$GNGSA,A,3,37,20,07,,,,,,,,,1.07,0.72,0.79,4*08

表 9.3-1 GSA 语句格式/GSA Data Format

名称/Name	举例/Example	单位/Units	描述/Description
语句 ID/ Message ID	$GNGSA		表明语句为 GSA 信息 /Indicates that the statement is GSA information
模式 1/ Mode 1	A		表 10.3-3/ See Table 10.3-3
模式 2/ Mode 2	3		表 10.3-2/ See Table 10.3-2
已使用卫星 ID 信息/ ID of satellite used	199		第一信道的 Sv 信息/Sv on Channel 1
已使用卫星 ID 信息/ ID of satellite used	195		第二信道的 Sv 信息/Sv on Channel 2
…	…		…
已使用卫星 ID 信息/ ID of satellite used	<Null>		十二信道的 Sv 信息（未使用则为空）/Sv on Channel 12 (Null fields when it is not Used)
PDOP	1.07		综合位置精度因子/Position Dilution of Precision
HDOP	0.72		水平精度因子/Horizontal Dilution of Precision
VDOP	0.79		垂直精度因子/Vertical Dilution of Precision
校验值	*05		
EOL	<CR> <LF>		结束标志符/End of message termination

表 9.3-2/Table 10.3-2

值/Value	描述/Description
1	未定位
2	2D 定位
3	3D 定位

表 9.3-3 /Table 10.3-3

值/Value	描述/Description
M	手动选择 2D 或者 3D 模式
A	自动选择 2D 或者 3D 模式

9.4 GSV-可见卫星信息//GSV-GNSS Satellites in View

此语句包含可见卫星的 PRNs，方位角和仰角等信息。

This sentence contains the mode of operation, type of fix, PRN of the satellites used in the solution as well as PDOP, HDOP and VDOP.

$GPGSV,4,1,13,27,78,149,46,199,60,149,39,04,59,289,43,194,56,045,44,1*64

$GPGSV,4,2,13,195,54,108,43,16,50,008,43,08,45,203,42,26,33,038,40,1*5A

$GPGSV,4,3,13,09,28,313,33,31,28,098,42,193,26,167,39,03,11,233,39,1*52

$GPGSV,4,4,13,22,,,35,1*60

$GPGSV,3,1,10,27,78,149,50,199,60,149,48,04,59,289,46,194,56,045,45,8*6C

$GPGSV,3,2,10,195,54,108,46,08,45,203,48,26,33,038,36,09,28,313,31,8*54

$GPGSV,3,3,10,193,26,167,44,03,11,233,43,8*55

$GLGSV,1,1,02,66,38,231,37,67,31,297,33,1*7A

$GAGSV,1,1,02,05,,,41,24,,,41,7*72

$GAGSV,1,1,02,05,,,45,24,,,41,1*70

$GBGSV,3,1,11,07,65,346,40,37,50,357,43,23,33,068,26,10,32,262,41,1*7A

$GBGSV,3,2,11,20,28,264,35,01,,,42,02,,,36,16,,,42,1*48

$GBGSV,3,3,11,03,,,40,05,,,28,32,,,38,1*74

$GBGSV,1,1,04,37,50,357,41,23,33,068,45,20,28,264,37,32,,,41,4*44

表 9.4-1 GSV 语句格式/ GSV Data Format

名称/Name	举例/Example	单位/Units	描述/Description
语句 ID/Message ID	$GPGSV		表明此语句为 GSV 信息/GSV protocol header
GSV 总数信息/Number of Message	4		本次 GSV 语句的总条数/Total number of GSV sentences
GSV 条数信息/ Message Number	1		本条语句为 GSV 语句中的第几条/Sentence number of the total
可见卫星信息/Satellites in View	13		当前可见卫星总数/Number of satellites in view
卫星 ID/Satellite ID	27		
卫星仰角/Elevation	78	度/degrees	范围 00 到 90/ Range 00 to 90
卫星方位角/Azinmuth	149	度/degrees	范围 000 到 359/ Range 000 to 359
信噪比 (C/NO)/SNR(C/NO)	46	dB-Hz	范围 00 到 90（未使用则为空）/ Range 00 to 99, null when not tracking
…			…
可见卫星信息/Satellites in View	194		
卫星 ID/Satellite ID	56	度/degrees	范围 00 到 90/ Range 00 to 90

卫星仰角/Elevation	045	度/degrees	范围 000 到 359/ Range 000 to 359
卫星方位角/Azinmuth	44	dB-Hz	范围 00 到 90（未使用则为空）/ Range 00 to 99, null when not tracking
校验值/Checksum	*64		
EOL	<CR> <LF>		结束标志符/End of message termination

9.5 RMC-推荐定位信息/ RMC-Recommended Minimum locating information

此语句包含推荐定位的卫星定位信息。

This statement contains the satellite positioning information for the recommended location.

$GNRMC,022326.000,A,2238.3443,N,11403.0962,E,0.01,169.33,120421,,,A,V*07

表 9.5-1: RMC 语句格式/ RMC Data Format

名称/Name	举例/Example	单位/Units	描述/Description
语句 ID/Message ID	$GNRMC		表明此语句为 RMC 信息/RMC protocol header
UTC 时间/UTS Position	022326.000		hhmmss.sss
使用状态/Status	A		A=数据已使用 V=数据未使用/A=data valid or V=data not valid
纬度/ Latitude	2238.3443		ddmm.mmmm
纬度 N/S/ N/S Indicator	N		N=北纬 S=南纬/N=north or S=south
经度/Longitude	11403.0962		dddmm.mmmm
经度 E/W /E/W Indicator	E		E=东经 W=西经/E=east or W=west
速度/ Speed Over Ground	0.01	节	
方位角/Course Over Ground	169.33	度	
UTC 日期/Date(UTC)	120421		ddmmyy
磁偏角/Magnetic variation	<Null>	度	未使用则为空/Null fields when it is not Used
磁偏角方位/Magnetic Variation Direction	<Null>		E=东经 W=西经 /E=east or W=west
定位模式/Fix Mode	A		A=自动, N=未定位, D=DGPS, E=DR/ A=autonomous, N = No fix, D=DGPS, E=DR
校验值/Checksum	*07		
EOL	<CR> <LF>		结束标志符/End of message termination

9.6 GLL-地理定位信息/Geographic Position – Latitude/Longitude

包含纬度和经度信息。

This sentence contains the fix latitude and longitude.

$GNGLL, 2238.3443,N, 11403.0962,E, 022326.000,A,A*4F

表 9.6.1：GLL 数据格式/GLL Data Format

名称/Name	举例/Example	单位/Units	描述/Description
Message ID	$GNGLL		GLL protocol header
Latitude	2238.3443		ddmm.mmmm
N/S Indicator	N		N=north or S=south
Longitude	11403.0962		dddmm.mmmm
E/W Indicator	E		E=east or W=west
UTC Position	022326.000		hhmmss.sss
Fix Status	A		A=data valid or V=data not valid
Fix Mode	A		A=autonomous, N = No fix, D=DGPS, E=DR
Checksum	*4F		
EOL	<CR> <LF>		End of message temination

9.7 VTG-地面速度信息/VTG-Course Over Ground and Ground Speed

此语句包含地面速度信息。

This statement contains the ground speed information.

$GNVTG,169.33,T,,M,0.01,N,0.02,K,A*2E

表 9.7-1: VTG 语句格式/VTG statement format

名称/Name	举例/Example	单位/Units	描述/Description
语句 ID/Message ID	$GNVTG		表明此语句为 VTG 信息/VTG protocol header
以真北为参考的地面航向/Ground course with true north as reference	169.33		000~359 度，前面的 0 也将被传输/At 000~359 degrees, the front 0 will also be transmitted
间隔符/Blank character	T		
以磁北为参考的地面航向/Ground heading with	<Null>		000~359 度，前面的 0 也将被传输/At 000~359 degrees, the front 0 will also be transmitted

magnetic north as reference			
间隔符/Blank character	M		
地面速率/Ground rate	0.01	Knots	000.0~999.9
间隔符 /Blank character	N		
地面速率/Ground rate	0.02	Km / h	0000.0~1851.8Km / h
间隔符 /Blank character	K		
模式指示/Mode indication	A		A=自主定位，D=差分，E=估算，N=数据无效/ A= autonomous localization, D= difference, E= imputation, and N= invalid data
EOL	<CR> <LF>		结束标志符/ End of message termination

9.8 ZDA-时间日期信息/ ZDA-Date and Time

此语句包含时间和日期信息

This sentence contains UTC date & time, and local time zone offset information.

$GNZDA,022326.000,12,04,2021,,*49

表 9.8-1: ZDA 语句格式/ ZDA Data Format

名称/Name	举例/Example	单位/Units	描述/Description
语句 ID/Message ID	$GNZDA		表明此语句为 ZDA 信息/ZDA protocol header
UTC 时间/UTC Time	022326.000		hhmmss（时分秒）格式
UTC 日期/UTC data	12		日
UTC 日期/UTC Month	04		月
UTC 日期/UTC Year	2021		年
时区/local zone hours	<Null>		
校验值/ Checksum	*49		
EOL	<CR> <LF>		结束标志符/ End of message termination

10 机械尺寸/Mechanical size

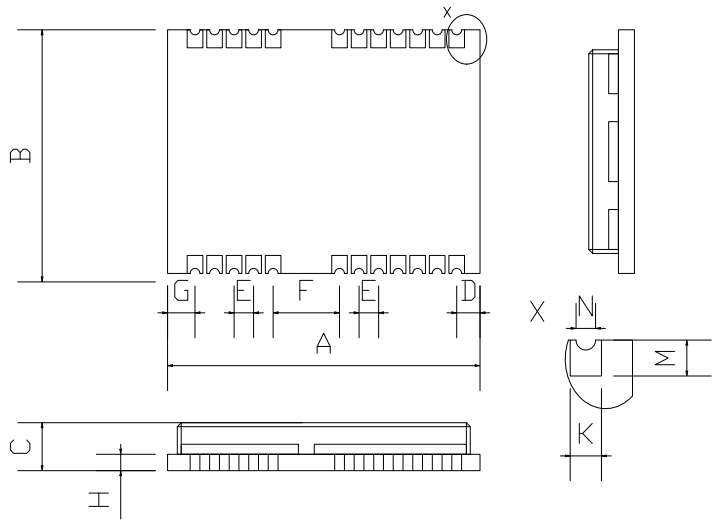

Symbol	Min. (mm)	Typ. (mm)	Max. (mm)
A	16.0	16.3	16.6
B	12.0	12.2	12.4
C	2.2	2.4	2.6
D	0.9	1.0	1.3
E	1.0	1.1	1.2
F	2.9	3.0	3.1
G	0.9	1.0	1.3
H		0.8	
M	0.8	0.9	1.0
N	0.4	0.5	0.6
K	0.7	0.8	0.9
Weight	1.6g		

图 10-1 外形尺寸/Figure 11-1, overall dimensions

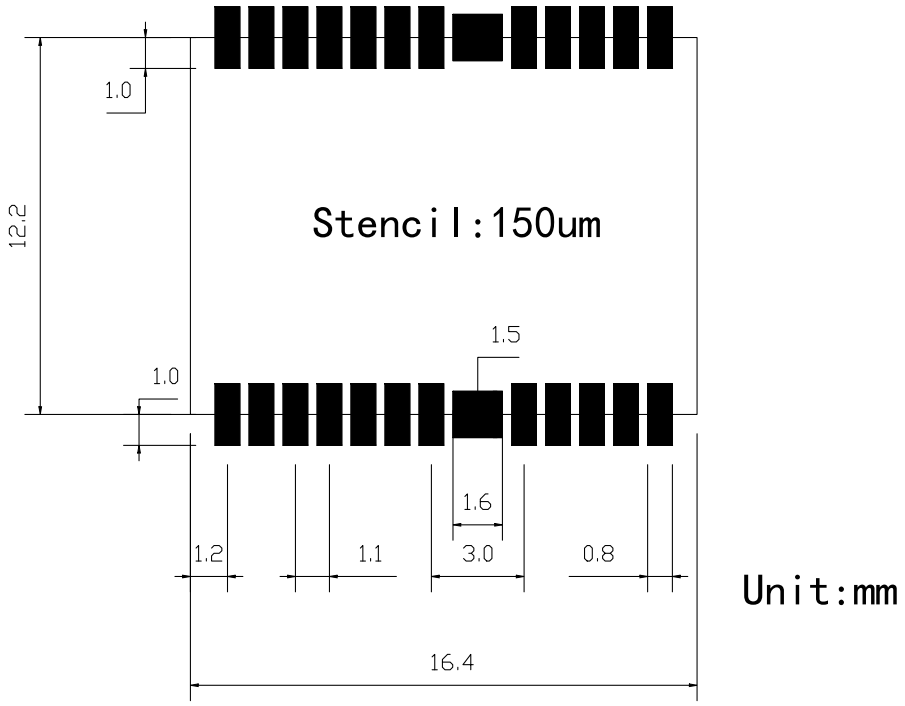

图 10-2 参考封装尺寸/Figure 11-2 Reference package dimensions

10.1 Layout 注意事项/ Layout Notes

1）元件布局/Component layout

GNSS 模块在 PCB 上的布局对于获得最佳的 GNSS 性能来说是至关重要的。与天线的连接应越短越好，避免对信号造成过大的衰减。 在系统板设计上，要确保射频电路跟其他数字电路严格分开，将模块远离 PCB 上的数字区域。同时还必须将 GNSS 模块远离发热量较大的区域。

The layout of the GNSS module on the PCB is critical for obtaining the optimal GNSS performance. The connection to the antenna should be as short as possible to avoid excessive attenuation of the signal. In the system board design, ensure that the RF circuit is strictly separated from other digital circuits, and keep the module away from the digital area on the PCB. The GNSS module must also be moved away from the heat.

2）无源天线设计/Passive antenna design

天线馈线的长度应尽可能短，且无源天线的下方要有一块完整的地。建议无源天线与 GNSS 模块放在 PCB 板相对的另一面。

The antenna feeder shall be as short as possible and have a complete plot beneath the passive antenna. It is recommended that the passive antenna and the GNSS module are placed on the other side of the PCB board.

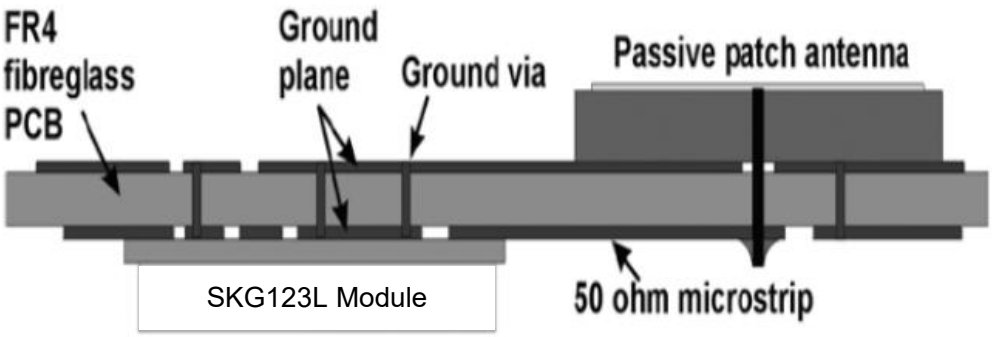

图 10.1-1 SKG123L 参考设计/Figure 11.1-1 SKG123L Reference Design

3）阻抗匹配/ Impedance matching

天线馈线的阻抗需为 50 Ohm，为了达到 50 Ohm 的阻抗，微带线的宽度 W 要根据导线和参考面的距离 H，PCB 介质板的介电常数 εr，以及 PCB 的结构来选择。

The impedance of the antenna feeder should be 50 Ohm. In order to reach the impedance of 50 Ohm, the width W of the microband line should be selected based on the distance between the wire and the reference surface H, the dielectric constant of the PCB medium plate r, and the structure of the PCB.

4）微带线设计/ Microband line design

- 微带线的长度应该尽可能的短，标准 PCB 上应该尽量不选用超过 2.5 cm（1 inch）而又没有屏蔽层的微带线；/The length of the microstrip line should be as short as possible, and the standard PCB should try not to choose more than 2.5 cm (1 inch) and no shielding layer of the microstrip line;

- 射频连接线的走线应避免靠近数字信号线；/The wiring of the RF connection line should be avoided close to the digital signal line;
- 在连接地平面时要采用尽可能多的过孔；/In the ground plane to use as many holes as possible;
- 布线应远离噪声源，如:开关电源，数字信号，晶振，处理器等；/Wiring should be far away from the noise sources, such as: switching power supply, digital signal, crystal vibration, processor, etc.;
- 微带线相对应的参考地层应保持完整；/The reference strata corresponding to the microstrip line shall remain intact;
- 微带线特性阻抗必须为 50 ohm；/The microstrip line characteristic impedance must be 50 ohm;

为了减小信号衰减，微带线走线时要避免锐角。

In order to reduce signal attenuation, microstrip lines should avoid sharp angles.

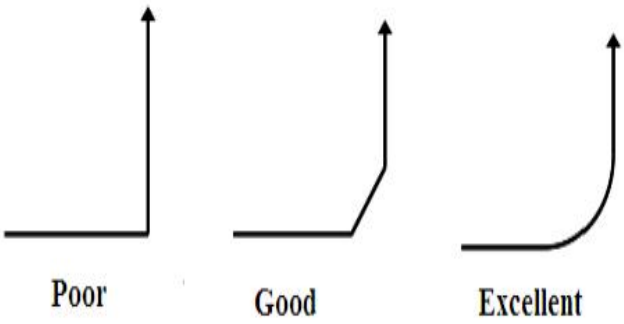

图 10.1-2 SKG123L 微带线设计推荐/Figure 11.1-2 SKG123L Microband line design recommendation

11 包装规格/ Packing specifications

模块采用卷带包装，每卷 1200 片。

The module is wrapped in 1200 pieces per volume.

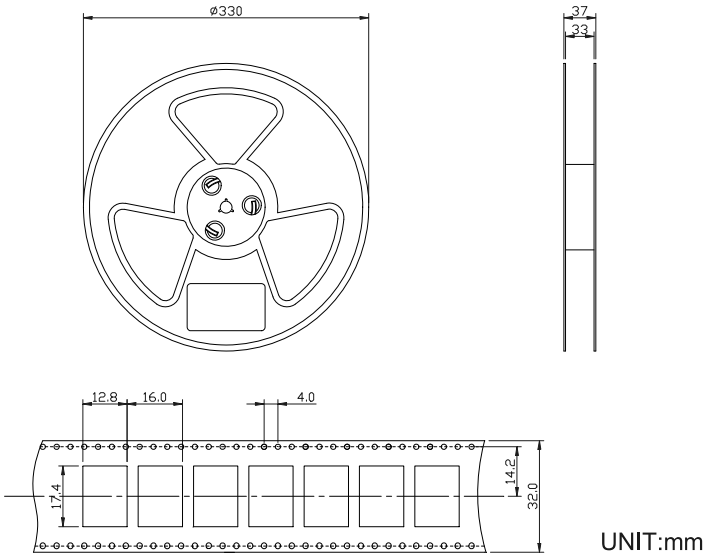

图 11-1 SKG123L 包装图/Figure 12-1 The SKG123L package diagram

12 贴片建议/Paste suggestions

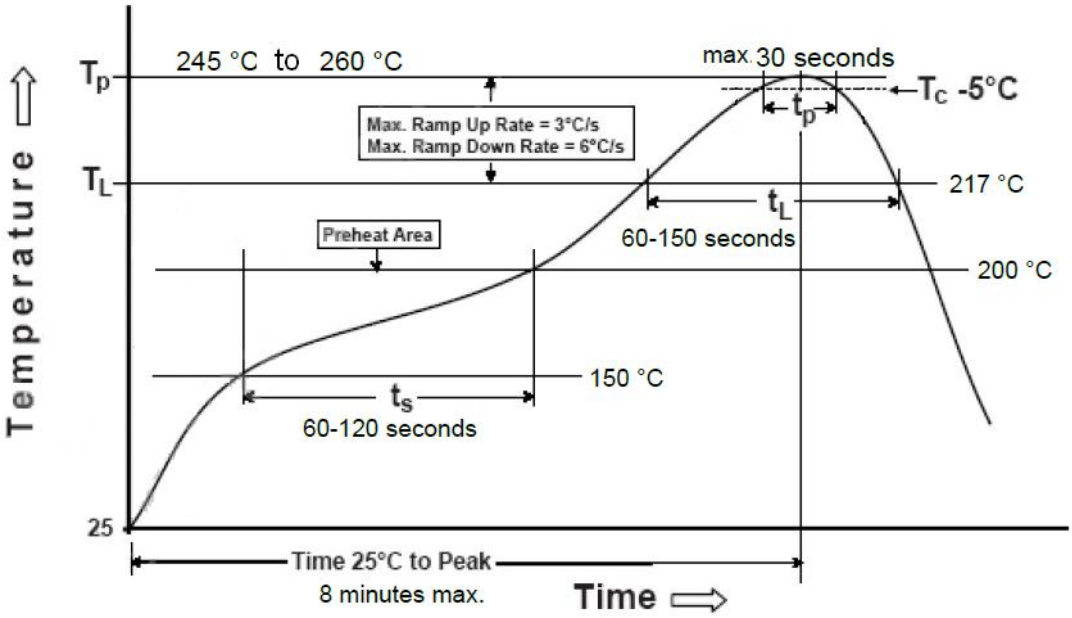

图 12-1 SKG123L 推荐炉温曲线/Figure 13-1. SKG123L recommended furnace temperature curve

Melting Temperature: 217 °C

Stencil Thickness: 150um

13 参考电路/ Reference circuit

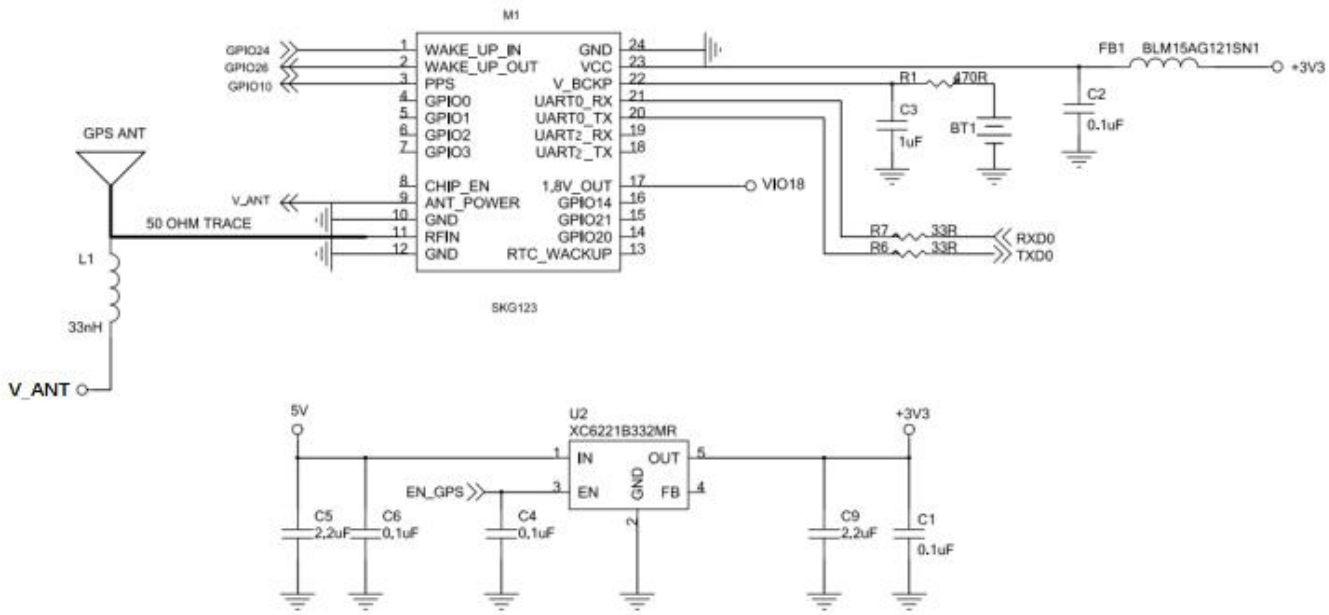

SKG123L 参考电路/SKG123L reference circuit

注意事项/Matters need attention：

1. GPIO0-11 电平为 2.80V±5%；其余 GPIO 为 1.80V±5%，使用时需注意电平需匹配。

1. The GPIO 0-11 level is 2.80V ± 5%; the remaining G P I O is 1.80V ± 5%, so pay attention to the level to match when used.

2. 模块外部 MCU 需使用 1 个 GPIO 连接 LDO EN 引脚；预留重启 SKG123L 机制.

2. The external MCU of the module shall use 1 GPIO connection to the LDO EN pin; reserve the restart SKG123L mechanism.

14 订购信息/ Order information

型号/ Module No.	功耗/ Consumption
SKG123L	52mA
SKG123LD	26mA

15 联系方式/Contact information

Skylab M&C Technology Co., Ltd.

深圳市天工测控技术有限公司

地址: 深圳市龙华区龙华街道工业东路利金城科技工业园 9#厂房 6 楼

电话: 86-755 8340 8210（Sales Support）

电话: 86-755 8340 8510（Technical Support）

传真: 86-755-8340 8560

邮箱: technicalsupport@skylab.com.cn

网站: www.skylab.com.cn www.skylabmodule.com